Accessories

PB-10/20

Dry air flow

200 - 400 m³/h

To increase pressure set-up on DST's single phase units. Handy option when the standard fans pressure set-up is not sufficient. Electric supply through the dehumidifiers humidistat plug (optional on the smaller units, standard on the larger), thereby starts and stops with the unit. The pressure box has as standard a humidistat plug so it is possible to have multiple pressure boxes to one dehumidifier and also a humidistat.

Model	PB-10	PB-20
Dry air flow[2] (m³/h)	200	400
Static pressure dry air [Pa]	400	400
Total power (kW)	0,083	0,169
Supply fuse 230V / 50Hz (A)	10	10
Weight (kg)	7.3	7.5

DST Seibu Giken

AIR FLOW

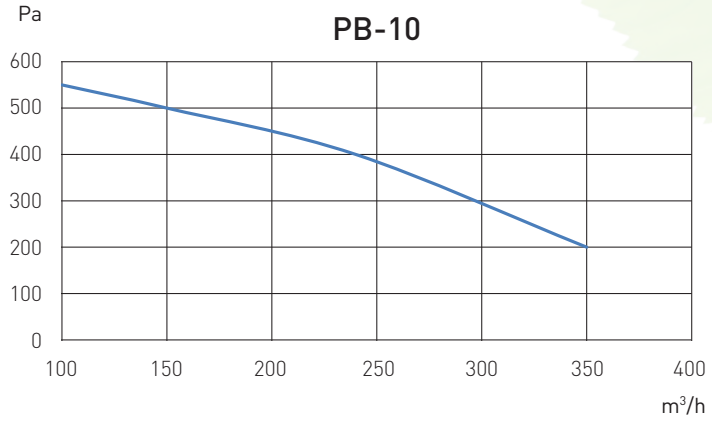

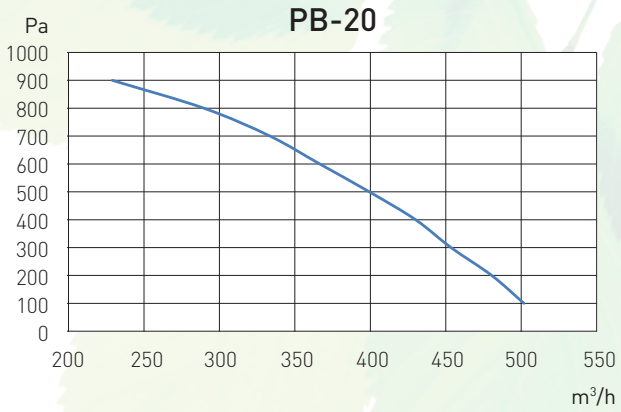

INSTRUCTIONS

Connecting the pressure boxes
Single pressure box

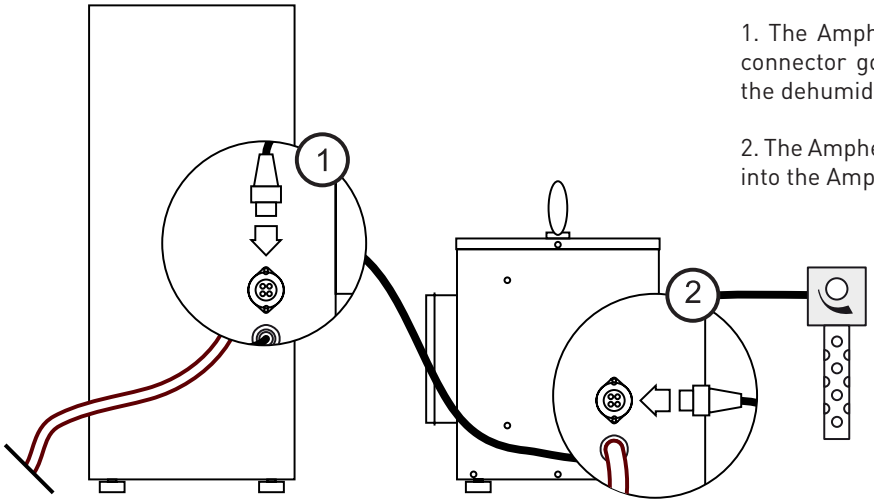

1. The Amphenol connector on the pressure box connector goes into the Amphenol connector on the dehumidifier.

2. The Amphenol connector on the humidistat goes into the Amphenol connector on the pressure box.

DIMENSIONS

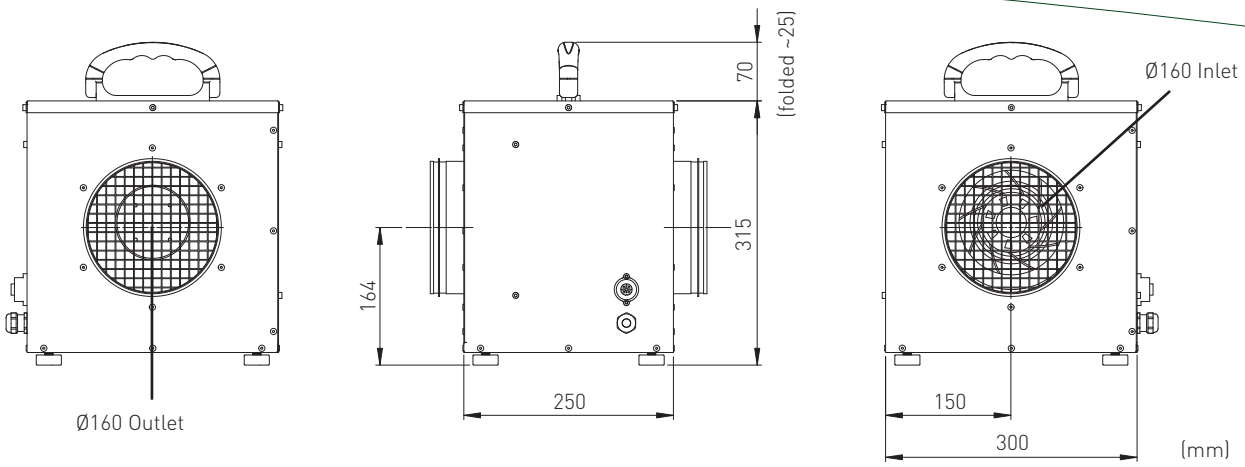

Subject to change without notice. Download installation drawing at www.dst-sg.com

Seibu Giken DST AB

Avestagatan 33 | 163 53 Spånga, Sweden

Tel +46 8 445 77 20 | Fax +46 8 445 77 39

www.dst-sg.com | info@dst-sg.com

EN 17.06